Smun
XIMENG ELECTRIC

Zhejiang Ximeng Electronic Technology Co.,ltd.

250W Single Output Switching Power Supply LRS-250 Series



Size：215*115*30mm

Features:

- AC input range selectable by switch
- Built-in EMI filter, tiny ripple
- Protections:Short circuit/Overload/Over voltage Over temperature
- Cooling by free air convection
- 43,000 hours of continuous operation at 25 ℃
- 100% full load burn-in test
- LED indicator for power on
- Compliance to IEC/EN60335-1 (PD3) and IEC/EN61558-1,2-16 suitable for home appliance
- 3 years warranty

ISO9001:4008

SPECIFICATION

Model		LRS-250-12	LRS-250-15	LRS-250-24	LRS-250-36	LRS-250-48
Output	DC voltage	12V	15V	24V	36V	48V
	Rated current	21A	17A	10.5A	7.0A	5.3A
	Current range	0-21A	0-17A	0-10.5A	0-7.0A	0-5.3A
	Rated power	252W	255W	252W	252W	255W
	Ripple&noise	100mVp-p	150mVp-p	150mVp-p	150mVp-p	150mVp-p
	Voltage adj.range	10.5-13.8V	13.5-18V	21.6-28.8V	32.4-39.6V	43.2-52.8V
	Voltage tolerance	±1.0%	±1.0%	±1.0%	±1.0%	±1.0%
	Line regulation	±0.5%	±0.5%	±0.5%	±0.5%	±0.5%
	Load regulation	±1.0%	±0.5%	±0.5%	±0.5%	±0.5%
	Set up,rise time	1500ms,50ms/230VAC 1500ms,50ms/115VAC(full load)				
	Hold up time（Typ.）	16ms/230VAC 12ms/115VAC(full load)				
Input	Voltage range	85~132VAC/170~264VAC by switch 240~370VDC				
	Frequency	47 ~ 63Hz				
	Efficiency	87%	88%	89%	89%	90%
	AC current	4A/115V 2.2A/230V				
	Inrush current	Cold start: 60A/115V 60A/230V				
	Leakage current	<2mA/240VAC				
Protection	Overload	Rated output power 110%~140% start overload protection				
		Protection type:hiccup mode,auto-recovery after fault condition is removed				
	Over voltage	13.8-16.2V	18.75-21.75V	28.8-33.6V	41.4-48.6V	55.2-64.8V
		Protection type:Shut off o/p voltage,re-power on to recover				
Environment	Working temperature	-20℃～+70℃				
	Working humidity	20-90%RH				
	Storage temp,humidity	-45~+85℃，20%-95%RH non-condensing				
	Temp.coefficient	±0.03%℃(0-50℃)				
	Vibration	10 ~ 500Hz, 5G 12min./1cycle, period for 60min. each along X, Y, Z axes				
Safety & EMC	Safety standards	Compliance to:GB4943.1 EN 60950.1 safety standards				
	Withstand voltage	I/P-O/P:4.0KVAC I/P-FG:2.0KVAC O/P-PG:0.5KVAC				
	Isolation resistance	I/P-O/P, I/P-FG, O/P-FG:100M Ohms / 500VDC / 25℃/ 70% RH				
	EMC emission	EN61000-3-2:2014/EN61000-3-3:2013				
	EMC immunity	EN 55032:2015/EN55035:2017/60950-1				
Others	MTBF	>347.5K hrs MIL-HDBK-217F(25℃)				
	Size	L215*W115*H50mm				
	Packing	0.66KG				
Note	1. All parameters NOT specially mentioned are measured at 230VAC input,rated load and 25℃ of ambient temperature. 2. Ripple&noise are measured at 20MHz of bandwidth by using a 12 "twisted pair -wire terminated with a 0.1uf and 47uf parallel capacitors. 3. Tolerance:includes set up tolerance,line regulation and load regulation. 4. Derating output is required under low input voltage. Please refer to the derating curve for details. 5. The power supply should be considered as a part of the components in the system. All EMC tests will test the test samples on a metal iron plate with a thickness of 1mm, a length of 360mm * width of 360mm.					

Http://www.smun.com TEL:0577- 62657774

250W Single Output Switching Power Supply LRS-250 Series

Mechanical Specification

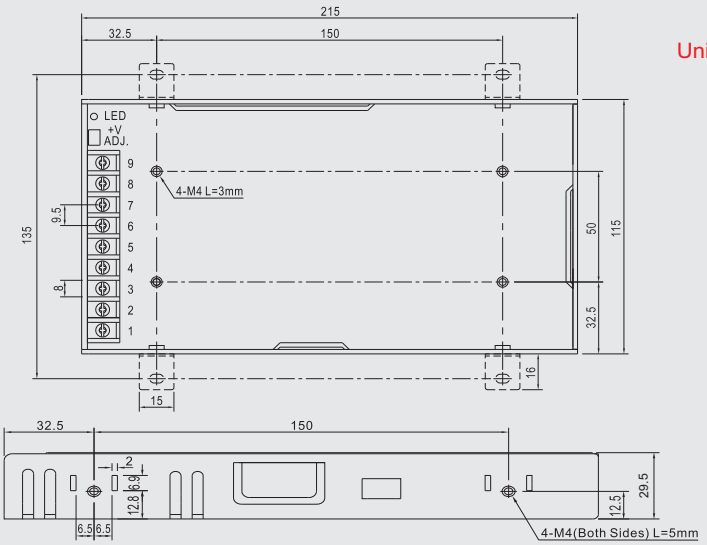

Terminal Pin No.Assignment:

Pin No.	Assigment	Pin No.	Assigment
1	AC/L	4-6	DC OUTPUT -V
2	AC/N	7-9	DC OUTPUT +V
3	FG ⏚		

Block Diagram

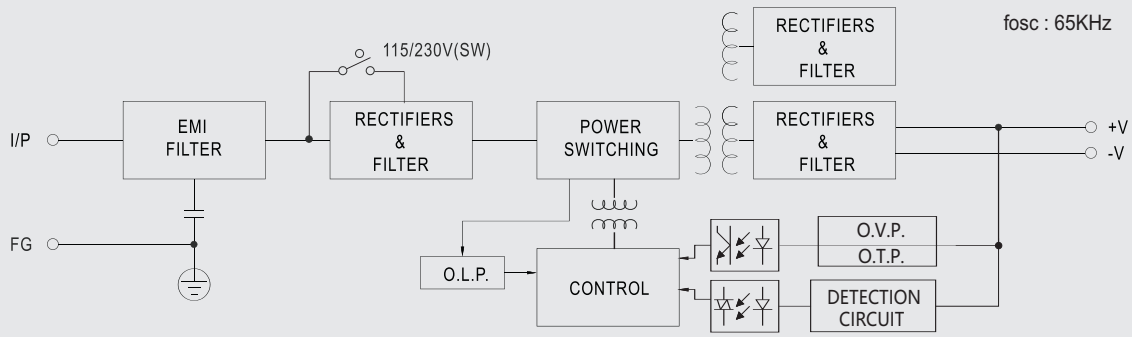

Derating Curve

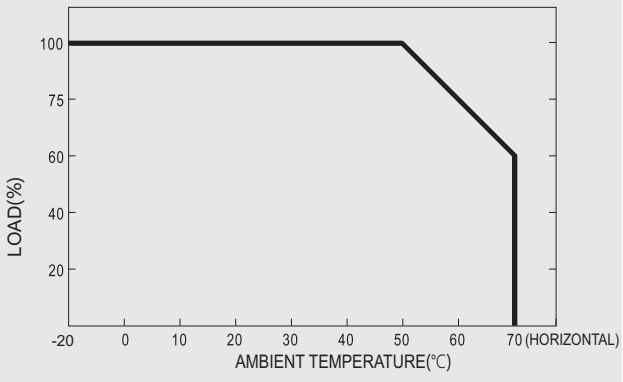

Static Characteristic

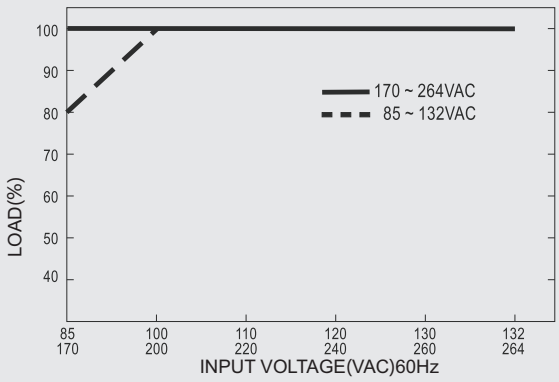

Http://www.smun.com TEL:0577- 62657774